CHAPTER 4: RELIABILITY EVALUATION OF COMPLEX SYSTEMS

- A system is said to be **simple** if either its components are connected in parallel, in series or in combinations of both. The reliability block diagram of a simple system consists of series or parallel configurations of independent components. Else, it can be reduced into subsystems having independent components connected either in parallel or in series.
- A system is said to be **complex** if the reliability block diagram of the system cannot be reduced into subsystems having independent components connected either in parallel or in series.

A commonly used example of a complex system known as the bridge configuration is shown in Fig. 16.1.

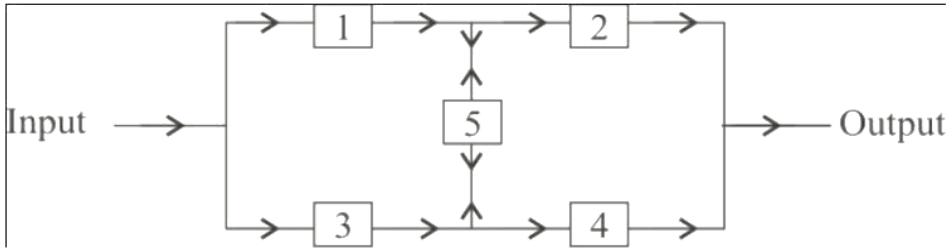

Fig. 16.1: Bridge configuration.

You can see that the reliability block diagram of the bridge configuration shown in Fig. 16.1 cannot be reduced into subsystems having independent components connected either in parallel or in series.

4.1 Decomposition Method or Conditional Probability Approach

To evaluate the reliability of a complex system using the decomposition method or conditional probability approach, we follow the steps explained below:

Step 1: We first choose a keystone component, say, K. In general, we select that component of a complex system as a keystone component, which appears to bind together its reliability block diagram. In fact, we can choose any component in the system as the keystone component and we shall get the same answer. But a poor choice may increase the number of steps in the calculations.

Step 2: We decompose the original system first by considering the keystone component K to be good, which means that it is 100% reliable. Secondly, we consider it as bad (which means that it is not reliable at all or has failed). Then the reliability (R) of the system is given by

$$\left.\begin{aligned} R_s = {} & P\left(\text{system success} \,\middle|\, \text{component K is good}\right) P(\text{component K is good}) \\ & + P(\text{system success} \,|\, \text{component K is bad})\, P(\text{component K is bad}) \end{aligned}\right\} \ldots (1)$$

If the component K is good, we replace it by a line in the reliability block diagram of the system. This means that the information can flow in either direction without any interruption. If the component K is bad, we remove it from the reliability block diagram of the system.This is because if component K is bad, it means that the path(s) of information which goes/go through component K is/are interrupted. Hence, information cannot pass through component K.

The unreliability (Q) of the original system is given by

$$\left.\begin{aligned} Q = {} & P\left(\text{system failure} \middle| \text{component K is good}\right) P(\text{component K is good}) \\ & + P(\text{system failure} \mid \text{component K is bad})\, P(\text{component K is bad}) \end{aligned}\right\} \ldots (2)$$

Step 3: If the reduced subsystems are in series or in parallel configuration, then we first evaluate the reliability of each subsystem by applying the procedure discussed previously. Finally, we combine the two reliabilities or unreliabilities using equation (1) or (2). But, if both or one of the subsystems are/is not in series or parallel configuration, then we select a keystone component again and apply the same method. This process continues until the most recently reduced subsystems are in series or in parallel configurations.

Example 1: Using the decomposition method or conditional probability approach, evaluate the reliability of the system having reliability block diagram shown in Fig. 16.1 for a mission of 1000 hours. Assume that each component has a reliability of 0.95 for a mission of 1000 hours. Also assume that the components are independent.

Solution: The calculations involved in evaluating the reliability of the complex system for this example using the decomposition method are explained as follows:

Step 1: We first choose a keystone component. Here we choose component 5 as the keystone component because this choice will reduce the reliability block diagram to a series or parallel configuration or a combination of both in a single step. What if we were to choose any component other than component 5? Note that we would have to further choose a keystone component to obtain a series or parallel or a combination of the two configurations. So, here component 5 is the key component K.

Step 2: Now, component 5 can be good or bad. The reduced subsystems corresponding to these cases are shown in Fig. 16.2.

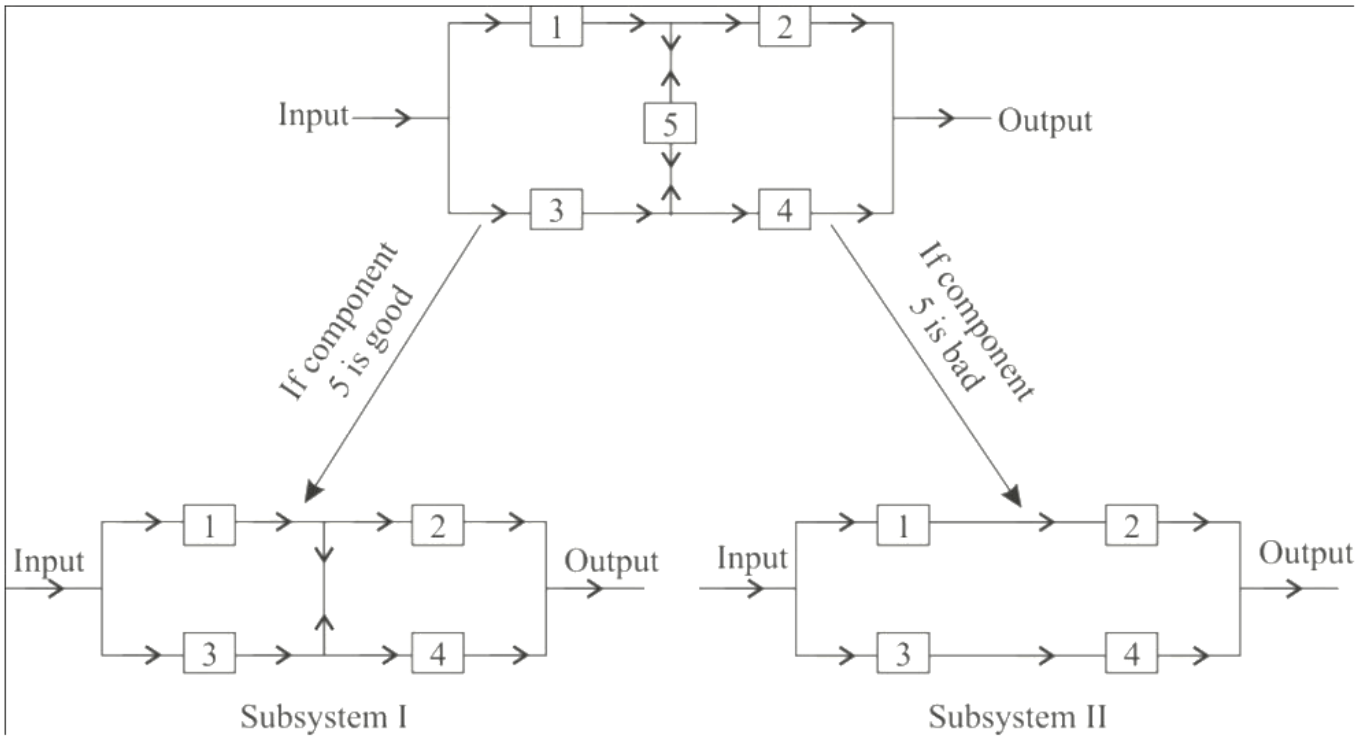

Fig. 16.2: Reduction of given system as per the good and bad status of the component 5.

If R_s denotes the reliability of the original system, then

$$R_s = P\left(\text{system success} \middle| \text{component 5 is good}\right) P(\text{component 5 is good})$$
$$+ P(\text{system success} \mid \text{component 5 is bad})\, P(\text{component 5 is bad})$$

$$\left.\begin{aligned} &= 0.95 \times P\left(\text{system success} \middle| \text{component 5 is good}\right) \\ &\quad + (1-0.95) \times P\left(\text{system success} \middle| \text{component 5 is bad}\right) \end{aligned}\right\} \ldots \text{(i)}$$

$$\left[\begin{aligned} &\because \text{reliability of component 5 is 0.95,} \\ &\therefore \text{unreliability} = 1 - 0.95 \end{aligned}\right]$$

Step 3: Let R_i denote the reliability of the component i, (i = 1, 2, 3, 4, 5). In this step, we first evaluate the reliabilities of each reduced subsystem. Note that in subsystem I, components 1 and 3 are in parallel, components 2 and 4 are in parallel and the two parallel configurations are in series (see Fig. 16.2).

$$\therefore P\left(\text{system success} \middle| \text{component 5 is good}\right) = \left[1-(1-R_1)(1-R_3)\right] \times \left[1-(1-R_2)(1-R_4)\right]$$

$$= \left[1-(1-R_3-R_1+R_1R_3)\right]\left[1-(1-R_4-R_2+R_2R_4)\right]$$

$$= \left(R_1+R_3-R_1R_3\right)\left(R_2+R_4-R_2R_4\right) \qquad \ldots \text{(ii)}$$

In subsystem II, components 1 and 2 are in series, components 3 and 4 are in series and the two series configurations are in parallel (see Fig. 16.2).

$$\therefore P(\text{system success} \mid \text{component 5 is bad}) = 1-(1-R_1R_2)(1-R_3R_4)$$

$$= 1-\left(1-R_3R_4-R_1R_2+R_1R_2R_3R_4\right)$$

$$= R_1R_2+R_3R_4-R_1R_2R_3R_4 \qquad \ldots \text{(iii)}$$

Using equations (ii) and (iii) in equation (i), we get

$$R_s = 0.95\left(R_1+R_3-R_1R_3\right)\left(R_2+R_4-R_2R_4\right)$$
$$+0.05\left(R_1R_2+R_3R_4-R_1R_2R_3R_4\right)$$

Since we are given that $R_1 = R_2 = R_3 = R_4 = R_5 = 0.95$, therefore

$$R_s = 0.95\left(0.95+0.95-(0.95)^2\right)\left(0.95+0.95-(0.95)^2\right)$$
$$+0.05\left[(0.95)^2+(0.95)^2-(0.95)^4\right]$$

$$= 0.95[1.90-0.9025][1.90-0.9025]$$
$$+0.05[0.9025+0.9025-0.81450625]$$
$$= 0.95(0.9975))(0.9975)+0.05(0.99049375)$$

$$= 0.9452559375+0.0495246875$$

$$= 0.994780625$$

4.2 Minimal Path Set and Cut Set

- The concept of minimal path set and cut set, forms the basis of the other two techniques used for reliability evaluation of complex systems.

Minimal Path Set

Let a system consist of n components, namely, 1, 2, 3, …, n. Let C denote the set of all components of the system. Then

$$C = \{1, 2, 3, \ldots, n\}$$

A **path set** P is a subset of C such that if all the components of P are successful, then there exists a path between the input and output of the system. A path set P is said to be the **minimal path set** if there exists no proper subset of P as a path set in the system. In other words, a path set P is said to be minimal path set if the failure of even a single component of P results in the failure of the path between the input and output.

For example, the path sets for the system having the reliability block diagram shown in Fig. 16.4 are as follows:

$$P_1 = \{1, 3\}, P_2 = \{2, 3\}, P_3 = \{1, 2, 3\}$$

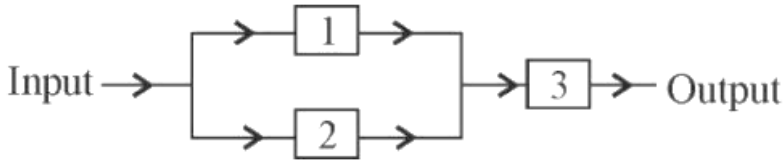

Fig. 16.4: Reliability block diagram of a system having components 1and 2 in parallel. The parallel configuration of 1 and 2 is in series with component 3.

Of these paths, P_1 and P_2 are minimal paths because there is no proper subset of P_1 and P_2, which is also a path. But the path P_3 is not a minimal path because there exist paths P_1 and P_2, which are proper subsets of P_3.

Minimal Cut Set

Let a system consist of n components, namely, 1, 2, 3, …, n. Let C denote the set of all components of the system. Then

$$C = \{1, 2, 3, \ldots, n\}$$

A **cut set** C_1 is a subset of C such that a failure of all components of C_1 results in the failure of the system.

A cut set C_1 is said to be the **minimal cut set** if there exists no proper subset of C_1 as a cut set in the system.

For example, the cut sets for the system having the reliability block diagram shown in Fig 16.4 are:

$$C_1 = \{3\}, C_2 = \{1,3\}, C_3 = \{2,3\}, C_4 = \{1,2\}, C_5 = \{1,2,3\}$$

Of these cut sets, only C_1 and C_4 are minimal cut sets, because there exist no proper subsets of C_1 and C_4, which are cut sets. For all other cut sets mentioned above, there exists at least one proper subset, which is a cut set. So these subsets are not minimal cut sets.

4.3 Cut Set Method

In this method, we first find minimal cut sets for the given system. Let $C_1, C_2, C_3, \ldots, C_k$ be the minimal cut sets for the system consisting of n components, namely, 1, 2, 3, …, n. Let m_i denote the number of components in the cut set C_i, $i = 1, 2, 3, \ldots, k$. By definition, all components of a minimal cut set must fail for the system to fail. This implies that the components of a cut set are connected in parallel from a reliability point of view. Further, the occurrence of any one cut set among $C_1, C_2, C_3, \ldots, C_k$ results in the failure of the system. This implies that $C_1, C_2, C_3, \ldots, C_k$ are connected in series from a reliability point of view. Thus, in terms of $C_1, C_2, C_3, \ldots, C_k$, the reliability block diagram of the system would be as shown in Fig. 16.5,

where the m_i components of cut set C_i are denoted by

$$C_{i1}, C_{i2}, \ldots, C_{im_i}, 1 \le i \le k.$$

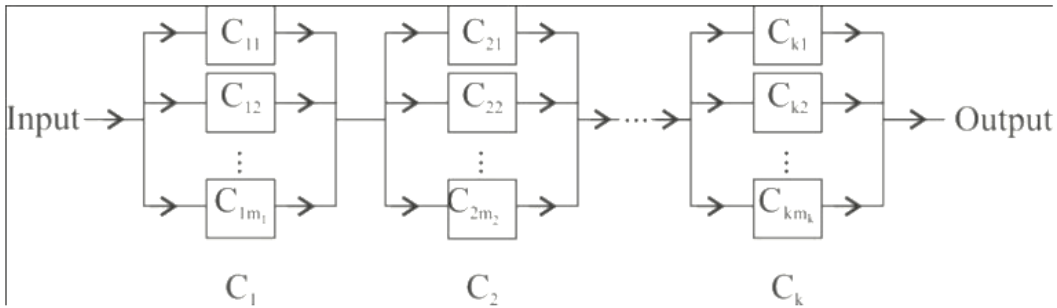

Fig. 16.5: A typical reliability block diagram in terms of k cut sets.

Refer to Fig. 16.5. Note that the cut sets $C_1, C_2, ..., C_k$ are connected in series. If all the components of C_i and $C_j, (1 \le i, j \le k, \text{but } i \ne j)$ are distinct, you can evaluate the reliability of the system using the procedure explained in Sec. 4.3. However, in general, for complex systems, one or morecomponent(s) of one cut set appears/appear in other cut sets (e.g., in Fig. 16.6,component 1 appears in C_1 and C_3, etc.). Due to this reason, we cannot applythe procedure explained in Sec. 4.3. Always remember this important pointbefore you apply the cut set method. Then you can give a thought as to how wecan evaluate the reliability of such a system. Let us give you some hints:

- This method evaluates the probability of failure of the system (i.e., unreliability) and reliability is obtained by subtracting unreliability from 1.
- The system will fail if at least one of the cut sets $C_1, C_2, ..., C_k$ occurs (recall the definition of a cut set).

Now, you have to simply identify a law of probability which gives you the probability of failure. Thus, if Q_s denotes the unreliability of the system, then

$$Q_s = P(C_1 \cup C_2 \cup C_3 \cup ... \cup C_k) \qquad ...(3)$$

$$\left[\begin{array}{l} \because \text{occurrence of either of } C_i, 1 \le i \le k, \\ \text{will interrupt all the paths from input to output.} \end{array}\right]$$

Example 2: Using the cut set method, evaluate the reliability of the system, which has the reliability block diagram shown in Fig. 16.1 for a mission of 1000 hours. It is given that each component has reliability of 0.95 for a mission of 1000 hours. Assume that the components are independent.

Solution: For applying the cut set method, we first find all minimal cut sets for the system having the reliability block diagram shown in Fig. 16.1. The minimal cut sets for this system have already been listed in E2. So, we can write

$$C_1 = \{1,3\}, C_2 = \{2,4\}, C_3 = \{1,5,4\}, C_4 = \{3,5,2\}.$$

From a reliability point of view, these cut sets can be shown as in Fig. 16.6.

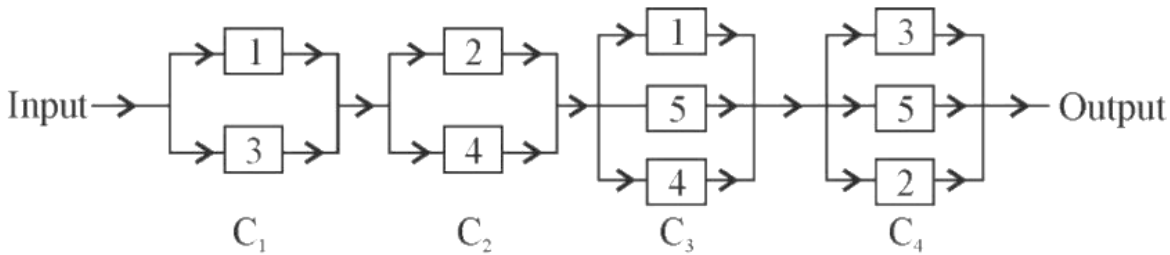

Fig. 16.6: Cut sets for the reliability block diagram of Fig. 16.1.

As mentioned earlier, you should always remember that although C_1, C_2, C_3, C_4 seem to be connected in series in Fig. 16.6, we cannot use the concept of series system because these are not made up of independent components. Note that component 4 appears in both C_2 and C_3, component 2 appears in both C_2 and C_4, etc.

Therefore, if Q_i denotes the unreliability of the component i, (i = 1, 2, 3, 4, 5) and Q_s that of the system, then by cut set method, we get

$$Q_s = P(C_1 \cup C_2 \cup C_3 \cup C_4)$$

Applying the addition law of probability (inclusion-exclusion rule), we get

$$\left.\begin{aligned} Q_s = {} & P(C_1)+P(C_2)+P(C_3)+P(C_4)-P(C_1\cap C_2)-P(C_1\cap C_3) \\ & -P(C_1\cap C_4)-P(C_2\cap C_3)-P(C_2\cap C_4)-P(C_3\cap C_4) \\ & +P(C_1\cap C_2\cap C_3)+P(C_1\cap C_2\cap C_4)+P(C_1\cap C_3\cap C_4) \\ & +P(C_2\cap C_3\cap C_4)-P(C_1\cap C_2\cap C_3\cap C_4) \end{aligned}\right\} \quad \ldots \text{(i)}$$

$$\left[\begin{aligned} & \because \text{From Probability \& Statistics, you have studied that} \\ & P(A\cup B)=P(A)+P(B)-P(A\cap B) \\ & P(A\cup B\cup C)=P(A)+P(B)+P(C)-P(A\cap B)-P(A\cap C)-P(B\cap C) \\ & \qquad\qquad +P(A\cap B\cap C), \text{ etc.} \end{aligned}\right]$$

Let us first evaluate each term of R.H.S. of (i) separately.

$$P(C_1)=Q_1Q_3 \qquad \left[\begin{aligned} & \because \text{occurrence of cut set } C_1 \text{ means that} \\ & \text{all components of } C_1 \text{ must fail.} \end{aligned}\right]$$

Similarly,

$$P(C_2)=Q_2Q_4$$

$$P(C_3)=Q_1Q_5Q_4$$

$$P(C_4)=Q_3Q_5Q_2$$

$$P(C_1\cap C_2)=P(C_1)P(C_2)=Q_1Q_2Q_3Q_4$$

$$P(C_1\cap C_3)=P(C_1)P(C_3)=Q_1Q_3Q_4Q_5 \qquad [\because \text{we know that } P(A\cap A)=P(A)]$$

$$P(C_1 \cap C_4) = P(C_1)P(C_4) = Q_1Q_2Q_3Q_5$$

$$P(C_2 \cap C_3) = P(C_2)P(C_3) = Q_1Q_2Q_4Q_5$$

$$P(C_2 \cap C_4) = P(C_2)P(C_4) = Q_2Q_3Q_4Q_5$$

$$P(C_3 \cap C_4) = P(C_3)P(C_4) = Q_1Q_2Q_3Q_4Q_5$$

$$P(C_1 \cap C_2 \cap C_3) = P(C_1 \cap C_2 \cap C_4) = P(C_1 \cap C_3 \cap C_4) = P(C_2 \cap C_3 \cap C_4) = Q_1Q_2Q_3Q_4Q_5$$

$$P(C_1 \cap C_2 \cap C_3 \cap C_4) = P(C_1)P(C_2)P(C_3)P(C_4) = Q_1Q_2Q_3Q_4Q_5$$

We are given that all components (1, 2, 3, 4, 5) have the same reliability 0.95 for a mission of 1000 hours. Hence, their unreliability will also be the same. Let $Q_1 = Q_2 = Q_3 = Q_4 = Q_5 = Q$ (say). Then

$$P(C_1) = Q^2$$

$$P(C_2) = Q^2$$

$$P(C_3) = Q^3$$

$$P(C_4) = Q^3$$

$$P(C_1 \cap C_2) = P(C_1 \cap C_3) = P(C_1 \cap C_4) = P(C_2 \cap C_3) = P(C_2 \cap C_4) = Q^4$$

$$P(C_3 \cap C_4) = Q^5$$

$$P(C_1 \cap C_2 \cap C_3) = P(C_1 \cap C_2 \cap C_4) = P(C_1 \cap C_3 \cap C_4) = P(C_2 \cap C_3 \cap C_4) = Q^5$$

$$P(C_1 \cap C_2 \cap C_3 \cap C_4) = Q^5$$

Putting these values in (i), we get

$$Q_s = \left(Q^2 + Q^2 + Q^3 + Q^3\right) - \left(5Q^4 + Q^5\right) + \left(4Q^5\right) - Q^5$$

$$= 2Q^2 + 2Q^3 - 5Q^4 + 2Q^5$$

Since the reliability of each component for a mission of 1000 hours = 0.95, the unreliability of each component up to a mission

of 1000 hours $= Q = 1 - 0.95 = 0.05$

Hence, unreliability of the system (Q_s) is given by

$$Q_s = 2(0.05)^2 + 2(0.05)^3 - 5(0.05)^4 + 2(0.05)^5$$

$$= 0.005 + 0.00025 - 0.00003125 + 0.000000625$$

$$= 0.005219375 \qquad \ldots \text{(ii)}$$

Therefore, the reliability of the system (R_s) is given by

$R_s = 1 - Q_s = 1 - 0.005219375 = 0.994780625$

Note 1: Suppose we call $P(C_1), P(C_2), P(C_3), P(C_4)$ as first order terms; $P(C_1 \cap C_2), P(C_1 \cap C_3)$, etc. as second order terms; $P(C_1 \cap C_2 \cap C_3), P(C_1 \cap C_2 \cap C_4)$, etc. as third order terms and so on. Then for components having high reliability (that is, having low unreliability), the second and higher order terms can be ignored without affecting the value of reliability much. For example, in Example 2, if we neglect second order and higher order terms, then

$$Q_s = (2Q^2 + 3Q^3) = 0.00525 \text{ and } R_s = 1 - 0.00525 = 0.99475$$

The percentage error in the value of R_s is

$$\frac{0.994780625 - 0.99475}{0.994780625} \times 100\% \square\ 0.0030786\% = 3.0786 \times 10^{-3}\%$$

i.e., 0.0030% (approx) which can be tolerated. This approximation saves a lot of calculations! This is one of the main advantages of the cut set method. It will be clearer to you when you do the exercises E3 and E4. The second main advantage of this method is that the calculations can be done by programming on a digital computer.

4.4 Tie Set Method

- The tie set method is based on the concept of minimal path sets and in this method we evaluate the reliability of the system. Note that this method is different from the cut set method in which we evaluate the unreliability of the system.
- In the tie set method, we first find minimal path sets for the system. Let P_1, P_2,...,P_k be the minimal path sets for the system consisting of n components, namely, 1, 2, …, n. Let mi denote the number of components in the minimal path set P_i, (i=1, 2,...,n)

By definition, all components of a minimal path set must work successfully for the successful operation of the system along this path. Note that this implies that the components of a minimal path set must be connected in series from a reliability point of view. Further, the existence of any one path from among $P_1, P_2, \ldots, P_k$, from input to output ensures the successful operation of the

system. This implies that the minimal path sets are connected in parallel from a reliability point of view. Thus, the reliability block diagram of such a system can be shown in terms of $P_1, P_2, ..., P_k$ as in Fig. 16.7. But in Fig. 16.7, the minimal path sets $P_1, P_2, ..., P_k$ are represented by minimal tie sets $T_1, T_2, ..., T_k$. The name tie is given to the minimal paths because the nodes of the reliability graph (see Fig. 14.2) tie the different branches together to form a path between input and output.

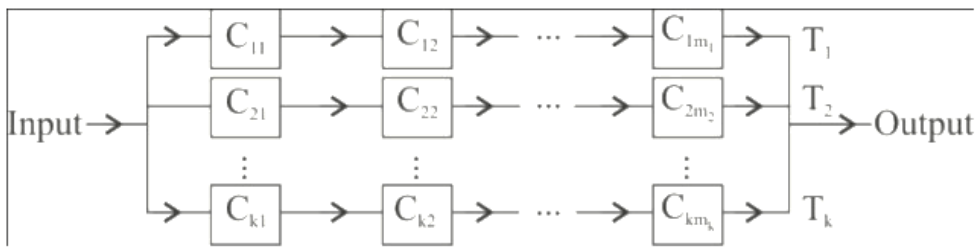

Fig. 16.7: A typical reliability block diagram in terms of k minimal path sets.

As explained for cut set method, the reliability of the system (R_s) can be obtained by expanding the expression given below using the addition law of probability:

$$R_s = P(T_1 \cup T_2 \cup T_3 \cup ... \cup P_k) \qquad \ldots (4)$$

Example 3: Evaluate the reliability of the system for which the reliability block diagram is shown in Fig. 16.1 for a mission of 500 hours by using the tie set method. It is given that each component has reliability of 0.95 for a mission of 500 hours. Assume that all components are independent.

Solution: For applying the tie set method, we first find the minimal path sets for the system having the reliability block diagram shown in Fig. 16.1. The minimal path sets for this system have already been listed in E2. So we repeat them as follows:

$$P_1 = \{1,2\}, P_2 = \{3,4\}, P_3 = \{1,5,4\}, P_4 = \{3,5,2\}$$

Let us denote these minimal path sets by minimal tie sets T_1, T_2, T_3 and T_4, respectively. The reliability block diagram in terms of tie sets is shown in Fig. 16.8.

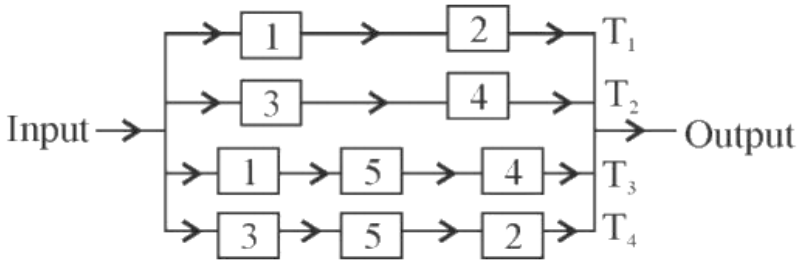

Fig. 16.8: Minimal path sets for Example 3.

You should remember one important point here: Although T_1, T_2, T_3, T_4 seem to be connected in parallel, you should not use the concept of parallel system because they are not made up of independent components. Note that component 1 appears in both T_1 and T_3, component 2 appears in T_1 and T_4, etc. Therefore, if R_i denotes the reliability of the component i, (i = 1, 2, 3, 4, 5), and R_s that of the system, then by tie set method, we have

$$R_s = P(T_1 \cup T_2 \cup T_3 \cup T_4)$$

Applying the addition law of probability

$$\left.\begin{aligned} R_s = {} & P(T_1)+P(T_2)+P(T_3)+P(T_4)-P(T_1\cap T_2)-P(T_1\cap T_3)-P(T_1\cap T_4) \\ & -P(T_2\cap T_3)-P(T_2\cap T_4)-P(T_3\cap T_4)+P(T_1\cap T_2\cap T_3) \\ & +P(T_1\cap T_2\cap T_4)+P(T_1\cap T_3\cap T_4)+P(T_2\cap T_3\cap T_4) \\ & -P(T_1\cap T_2\cap T_3\cap T_4) \end{aligned}\right\}\ldots(i)$$

Let us first evaluate each term of R.H.S. of (i) separately.

$$P(T_1)=R_1R_2$$

[$\because$ occurrence of tie set T_1 means that there exists a path between input and output through T_1. This implies that both components 1 and 2 must work successfully.]

Similarly,

$$P(T_2)=R_3R_4$$

$$P(T_3)=R_1R_5R_4$$

$$P(T_4)=R_3R_5R_2$$

$$P(T_1\cap T_2)=P(T_1)P(T_2)=R_1R_2R_3R_4$$

$$P(T_1\cap T_3)=P(T_1)P(T_3)=R_1R_2R_4R_5$$

$\left[\because \text{ occurrence of } T_1 \cap T_3 \text{ means that there exists a path between input and output through the paths } P_1 \text{ and } P_3. \text{ This requires that components } 1, 2, 4, 5 \text{ must work successfully. But component 1 appears in both paths and hence its probability is taken only once.}\right]$

In the same way, we can write

$$P(T_1 \cap T_4) = P(T_1)P(T_4) = R_1R_2R_3R_5$$

$$P(T_2 \cap T_3) = P(T_2)P(T_3) = R_1R_3R_4R_5$$

$$P(T_2 \cap T_4) = P(T_2)P(T_4) = R_2R_3R_4R_5$$

$$P(T_3 \cap T_4) = P(T_3)P(T_4) = R_1R_2R_3R_4R_5$$

$$P(T_1 \cap T_2 \cap T_3) = P(T_1)P(T_2)P(T_3) = R_1R_2R_3R_4R_5$$

$$P(T_1 \cap T_2 \cap T_4) = P(T_1)P(T_2)P(T_4) = R_1R_2R_3R_4R_5$$

$$P(T_1 \cap T_3 \cap T_4) = P(T_1)P(T_3)P(T_4) = R_1R_2R_3R_4R_5$$

$$P(T_2 \cap T_3 \cap T_4) = P(T_2)P(T_3)P(T_4) = R_1R_2R_3R_4R_5$$

$$P(T_1 \cap T_2 \cap T_3 \cap T_4) = P(T_1)P(T_2)P(T_3)P(T_4) = R_1R_2R_3R_4R_5$$

Since all components 1, 2, 3, 4, 5 have the same reliability 0.95 = (R, say) for a mission of 500 hours, we can replace R_1, R_2, R_3, R_4, R_5 by R in all expressions obtained above. So we get

$$P(T_1) = R^2, P(T_2) = R^2, P(T_3) = R^3, P(T_4) = R^3$$

$$P(T_1 \cap T_2) = P(T_1 \cap T_3) = P(T_1 \cap T_4) = P(T_2 \cap T_3) = P(T_2 \cap T_4) = R^4$$

$$P(T_3 \cap T_4) = R^5$$

$$P(T_1 \cap T_2 \cap T_3) = P(T_1 \cap T_2 \cap T_4) = P(T_1 \cap T_3 \cap T_4) = P(T_2 \cap T_3 \cap T_4) = R^5$$

$$P(T_1 \cap T_2 \cap T_3 \cap T_4) = R^5$$

Putting these values in (i), we get

$$R_s = (R^2 + R^2 + R^3 + R^3) - (5R^4 + R^5) + (4R^5) - R^5$$

$$= 2R^2 + 2R^3 - 5R^4 + 2R^5$$

$$= 2(0.95)^2 + 2(0.95)^3 - 5(0.95)^4 + 2(0.95)^5 \qquad [\because R = 0.95 \text{ given}]$$

$$= 1.805 + 1.71475 - 4.07253125 + 1.547561875$$

$$= 0.994780625$$

which is the same as obtained by the cut set method in Example 2.

ASSIGNMENT 1 (Work in groups of 4 people and submit during the next class)

E1) The reliability block diagram of a system is shown in Fig. 16.3. Evaluate the reliability of the system using the decomposition method for a mission of 1 year. Assume that the reliability of each component is 0.90 for a mission of 1 year and the components are independent.

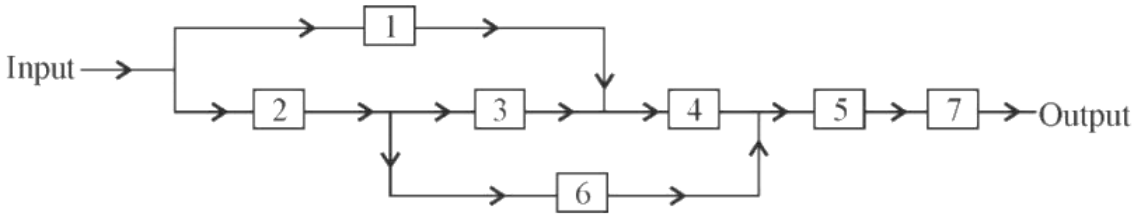

Fig. 16.3: Reliability block diagram for E1.

E2) For the system having the reliability block diagram shown in Fig. 16.1, obtain the minimal path sets and minimal cut sets.

E3) Evaluate the reliability of the system for which the reliability block diagram is shown in Fig. 16.3 for a mission of 1 year, using the cut set method. It is given that each component has reliability of 0.9 for a mission of 1 year. Assume that the components are independent. Use only first order terms in your calculations.

E4) You may be interested in knowing the amount of calculations involved in E3 if the calculations were not restricted to first order terms. Repeat the calculations keeping terms of all orders. Note that such exercises will not form a part of the examination due to time constraints.

E5) Evaluate the reliability of the sytem for which the reliability block diagram is shown in Fig. 16.3 for a mission of 1 year, using the tie set method. It is given that each component has reliability of 0.9 for a mission of 1 year. Assume that all components are independent.